DMP 334

Industrial Pressure Transmitter

- thinfilm sensor
- extremely robust and long term stable
- accuracy:
  0.175% / 0.125% FSO BFSL
  (0.35% / 0.25% FSO IEC 60770)
- nominal pressure ranges
  from 0 ... 600 bar
  up to 0 ... 2200 bar

The DMP 334 pressure transmitter is specially designed for use in hydraulic equipment under severe operation conditions.

Basic element of the DMP 334 is a thinfilm sensor which is welded onto a pressure port. This way - together with the solid construction - a pressure transmitter has been created that fulfills perfectly the requirements of machine and equipment manufacturers for sure operation and high reliability.

These features of the DMP 334, combined with excellent measuring parameters and good offset stability, offer the user an easy-to-use, reliable and rugged pressure transmitter.

The DMP 334 is available with all pressure ports commonly used in very high pressure systems. In addition, the customer can choose between different electrical connections.

Use for hydraulic systems in:

- hydraulic presses
- injection moulding machines
- handling equipment and mobile hydraulics
- elevated platforms
- test stands

Characteristics

- small thermal effect
- excellent linearity
- good long term stability
- option Ex: II 1 G EEx ia IIC T4 (only for 4 ... 20 mA / 2-wire) (TÜV 03 ATEX 2006 X)
- option: field housing
- customer specific versions:
  - variety of electrical and mechanical connections
  - other versions on request

CE Ex

DMP 334
Industrial Pressure Transmitter

TÜV CERT DIN EN ISO 9001

Input pressure range

Nominal pressure gauge	[bar]	600	1000	1600	2000	2200
Permissible overpressure	[bar]	800	1400	2200	2800	2800

Output signal / Supply

Standard	2-wire:	4 ... 20 mA / V_S = 12 ... 36 V_{DC}	Ex-protection:	V_S = 14 ... 28 V_{DC}
Optional	3-wire:	0 ... 20 mA / V_S = 14 ... 36 V_{DC} 0 ... 10 V / V_S = 14 ... 36 V_{DC}		

Performance

Accuracy [1]	standard: option (on request):	≤ ± 0.35 % FSO ≤ ± 0.25 % FSO	(BFSL: ≤ ± 0.175 % FSO) (BFSL: ≤ ± 0.125 % FSO)
Permissible load	current 2-wire: current 3-wire: voltage 3-wire:	$R_{max} = [(V_S - V_{S\,min}) / 0.02]\ \Omega$ R_{max} = 500 Ω R_{min} = 10 kΩ	
Long term stability	≤ ± 0.2 % FSO / year		
Influence effects	supply: load:	0.05 % FSO / 10 V 0.05 % FSO / kΩ	

Thermal effects

Thermal error for offset and span	≤ ± 0.25 % FSO / 10 K
in compensated range	-20 ... 85 °C

Electrical protection

Short-circuit protection	permanent
Reverse polarity protection	no damage, but also no function
Electromagnetic compatibility	emission and immunity according to EN 61326
Option Ex-protection DX13-DMP 334	II 1 G EEx ia IIC T4 (only with 4 ... 20 mA / 2-wire) safety technical maximum values: V_i = 28 V, I_i = 93 mA, P_i = 660 mW

Mechanical stability

Vibration	10 g RMS (20 ... 2000 Hz)
Shock	100 g / 11 ms

Permissible temperatures

Medium	-40 ... 140 °C
Electronics / environment	-25 ... 85 °C
Storage	-40 ... 125 °C

[1] accuracy according to IEC 60770 – limit point adjustment (non-linearity, hysteresis, repeatability)

Mechanical connection

Standard

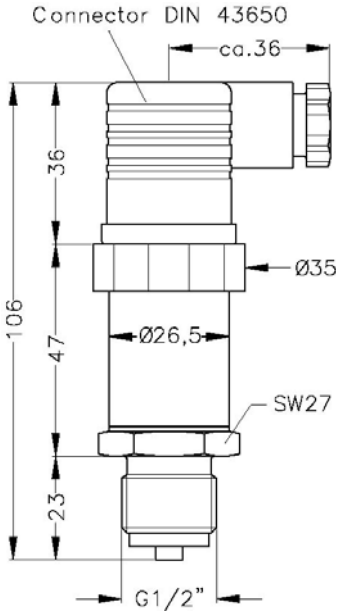

G1/2" EN 837 [2]
M20 x 1.5

Optional

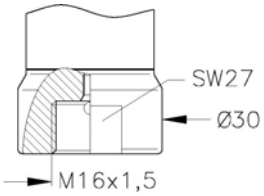

M16 x 1.5 internal thread

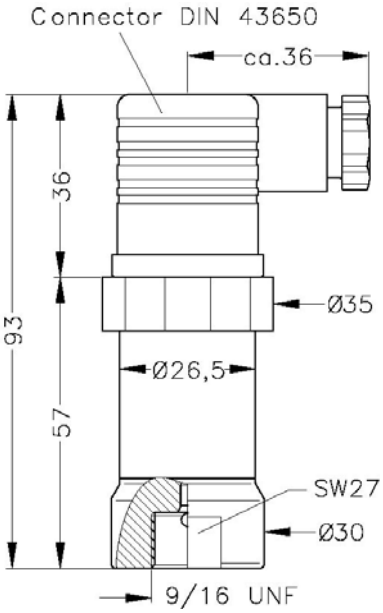

9/16" UNF internal thread

⇨ Ex-protection: total length increases by 17 mm!

Electrical connection

Standard

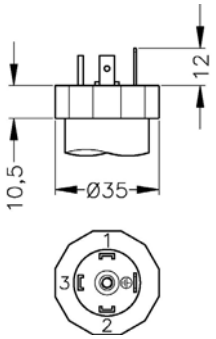

DIN 43650 (IP 65)

Optional

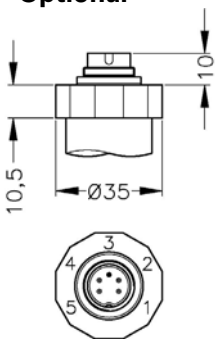

Binder Series 723 (IP 67)

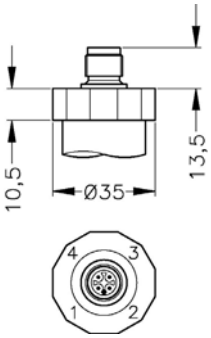

M12x1 4-pin (IP 67)

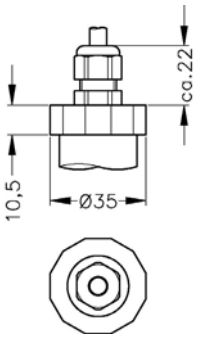

Cable gland (IP 67) [3]

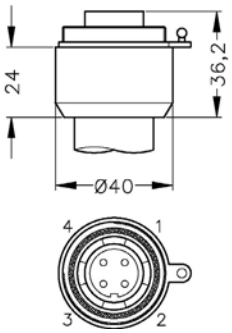

Buccaneer (IP 68)

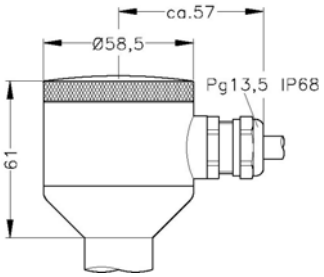

Field housing (IP 67)

[2] According to EN 837, the pressure port and the complement, at pressure value over 1000 bar must be preferably made of stainless steel with a tensile strength of R_p > 260 N/mm² in accordance with DIN 17440. The maximum allowed pressure is 1600 bar!

[3] different cable types and lengths available, standard: 2 m PVC cable

Materials

Pressure port	stainless steel 1.4542 (17-4PH)
Housing	stainless steel 1.4301 (304) / field housing: 1.4305 (303), cable gland: brass, nickel plated
Seals (media wetted)	none (welded version)
Diaphragm	stainless steel 1.4542 (17-4PH)
Media wetted parts	pressure port, diaphragm

Miscellaneous

Current consumption	signal output current: signal output voltage:	max. 25 mA max. 7 mA
Weight	approx. 200 g	
Installation position	any	

Pin configuration

Electrical connection		DIN 43650	Binder 723 (5-pin)	M12x1 (4-pin)	Buccaneer (4-pin)	cable colours (DIN 47100)
2-wire-system	Supply +	1	3	1	1	white
	Supply –	2	4	2	2	brown
	Ground	ground pin	5	4	4	yellow / black
3-wire-system	Supply +	1	3	1	1	white
	Supply –	2	4	2	2	brown
	Signal +	3	1	3	3	green
	Ground	ground pin	5	4	4	yellow / black

Wiring diagrams

2-wire-system (current)

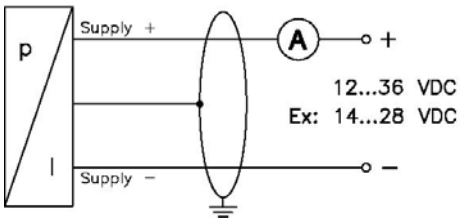

3-wire-system (current)

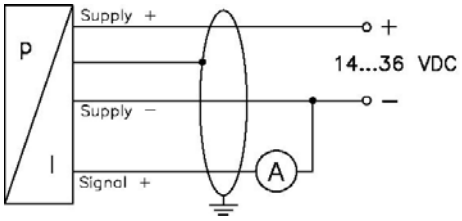

3-wire-system (voltage)

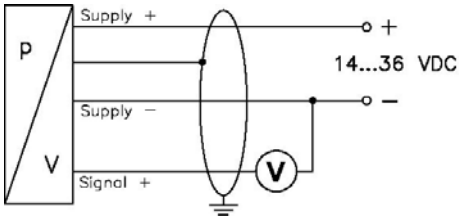

Ordering code DMP 334

DMP 334 □□□-□□□□-□-□-□□□-□□□-□-□□□

Pressure																								
gauge	1	4	0																					
Input	**[bar]**																							
600				6	0	0	3																	
1000				1	0	0	4																	
1600				1	6	0	4																	
2000				2	0	0	4																	
2200				2	2	0	4																	
customer				X	X	X	X																	
Output																								
4 ... 20 mA / 2-wire								1																
0 ... 20 mA / 3-wire								2																
0 ... 10 V / 3-wire								3																
Intrinsic safety for zone 0 / 4 ... 20 mA / 2-wire								E																
customer								X																
Accuracy																								
standard 0,35 %									3															
option on request 0,25 %									2															
customer									X															
Electrical Connection																								
Male and female plug DIN 43650										1	0	0												
Binder series 723 (5-pin)										2	0	0												
Cable gland incl. Cable [1]										4	0	0												
Buccaneer IP68										5	0	0												
M12x1 (4-pin)										M	0	0												
Field housing stainless steel										8	0	0												
customer										X	X	X												
Mechanical Connection																								
G1/2" EN 837 [2]													2	0	0									
M16x1,5 internal thread													P	0	0									
9/16 UNF internal thread													V	0	0									
customer													X	X	X									
Seals																								
without (welded version)																2								
customer																X								
Special version																								
standard																			0	0	0			
customer																			X	X	X			

[1] different cable types and lengths deliverable, standard: 2 m PVC cable (without ventilation tube), optionally cable with ventilation tube

[2] According to EN 837, the pressure port and the complement, at pressure value over 1000 bar must be preferably made of stainless steel with a tensile strength of R_P > 260 N/mm² in accordance with DIN 17440. The maximum allowed pressure is 1600 bar!

This ordering code contains product specification; properties are not guaranteed. Subject to change without notice.

010604

TR Automatyka Sp. z o.o.
ul. Lechicka 14, 02-156 Warszawa
NIP: 522-27-58-993
tel. +48 22 886 10 16, fax +48 22 846 50 37
http:\\ www.trautomatyka.pl
e-mail: biuro@trautomatyka.pl