XMP ci

Precision Pressure Transmitter for Process Industry

- capacitive ceramic sensor optional with diaphragm Al_2O_3 99.9 %
- stainless steel field housing or aluminium die cast case
- option: integrated, multiline LC display
- Option: HART® communication
- nominal pressure ranges from 0 ... 60 mbar up to 0 ... 20 bar

The precision pressure transmitter XMP ci has been developed especially for highest requirements in the process industry.

Basic element is a flush mounted, capacitive ceramic sensor with a diaphragm made of 96% or 99,9% Al_2O_3, which is characterised by high permissible overpressure and mechanical robustness.

Sensor and electronics are mounted shock- and vibration-proof in a stainless steel field housing or in a shapely, powder-coated aluminium die cast case.

Several process connections starting with standard inch threads as well as diverse process connections are available.

Talking about functionality BD SENSORS applies a high standard to the XMP series. The optional integrated LC display shows the actual value, the corresponding text info and the tendency (via bargraph). The user-friendly control software provides an easy menu handling and unproblematic configuration.

Characteristics

- accuracy:
  0.1 % FSO BFSL
  (0.2 % FSO IEC 60770)
- thermal error in compensated range –20 ... 80 °C:
  0.1 % FSO / 10 K
- output signal 4 ... 20 mA / 2-wire, optional with HART®
- **Option Ex**
  (IBExU05 ATEX 1106 X)
- optional: configuration in situ via push buttons in the display module or by remote access via HART® communication

CE Ex HART

XMP ci
Precision Pressure Transmitter

Input pressure range

Nominal pressure gauge [bar]	0.06	0.16 [1]	0.4 [1]	1 [1]	2	5	10	20
Permissible overpressure [bar]	2	2	4	7	15	25	40	60
Permissible vacuum [bar]	-0.2	-0.3	-0.5					

On customer request we adjust the devices by software on the standard pressure ranges, within the turn-down-possibility (starting at 0.02 bar). Deviating pressure ranges and vacuum ranges are also possible on request.

Output signal / Supply

Standard	2-wire: 4 ... 20 mA / V_S = 10 … 30 V_{DC}	Ex version: V_S = 10 ... 28 V_{DC}
Option	2-wire: 4 ... 20 mA with HART® communication (option HART® communication is delivered in Ex version as standard)	
	3-wire [2]: 0 … 10 V / V_S = 15 ... 36 V_{DC}	

Performance

Accuracy	IEC 60770 [3]: ≤ ± 0.2 % FSO	BFSL: ≤ ± 0.1 % FSO relating to nominal range
Permissible load	$R_{max} = [(V_S - V_{S\,min}) / 0{,}02]\ \Omega$	load during HART® communication: R_{min} = 250 Ω
Influence effects	supply: 0,05 % FSO / 10 V	permissible load: 0,05 % FSO / kΩ
Long term stability	≤ ± (0.1 x nominal range / adjusted range) % FSO / year	
Response time	200 ms – without consideration of the electronical damping	measuring rate 5/s
Adjustability	configuration of following parameters (via optional display module or HART® Interface) possible: - electronical damping: 0 … 100 s - offset: 0 ... 80 % FSO - turn down of span: max. 1:3	

Thermal errors (Offset and Span)

Thermal error	≤ ± (0.1 x nominal range / adjusted range) % FSO / 10 K
in compensated range	-20 ... 80 °C

Electrical protection

Short-circuit protection	permanent
Reverse polarity protection	no damage, but also no function
Electromagnetic compatibility	emission and immunity according to EN 61326
Option Ex protection AX12-XMP ci	stainless steel field housing with stainless steel pressure port: II 1 G EEx ia IIC T4 stainless steel field housing with PVC-/PVDF pressure port: II 1/2 G EEx ia IIC T4 [4] aluminium die cast case with stainless steel pressure port: II 1 G EEx ia IIB T4 aluminium die cast case with PVC-/PVDF pressure port: II 1/2 G EEx ia IIB T4 [4] safety technical maximum values: V_i = 28 V, I_i = 93 mA, P_i = 660 mW

Display module (optional)

Type	LC display, visible range 32.5 x 22.5 mm
Display for values	5-digit, 7-segment, digit size 8 mm, range of indication ± 9999
Additional display	8-digit, 14-segment, digit size 5 mm
Bargraph	52 segments (1 segment conforms approx. 2 % of set measuring range)
Accuracy	0.1 % ± 1 digit

[1] option Al_2O_3 99,9 % possible for nominal pressure ranges 0,16 bar, 0,4 bar and 1 bar

[2] in preparation

[3] accuracy according to IEC 60770 – limit point adjustment (non-linearity, hysteresis, repeatability) relating to nominal range

[4] The designation depends on the nominal pressure range. Nominal pressure ranges ≤ 60 mbar are marked with „2G".
For nominal pressure ranges > 60 mbar and < 10 bar attend the notice under item 17 in the EC type-examination certificate!

Mechanical stability	
Vibration	10 g RMS (20 ... 2000 Hz)
Shock	100 g / 11 msec

Permissible temperatures [5]	
Medium	-25 ... 125 °C
Electronics / environment	-20 ... 70 °C
Storage	-30 ... 80 °C

Housing types

Stainless steel field housing

standard

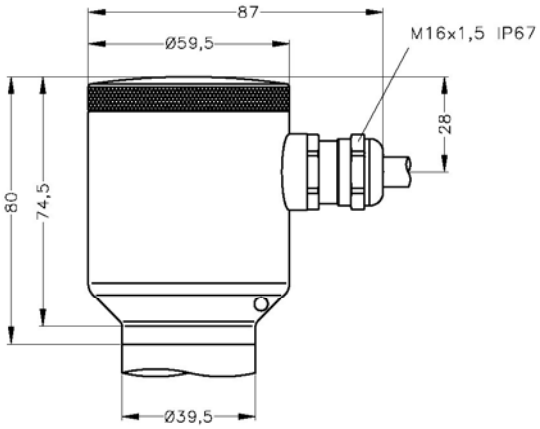

terminal clamp,
without display module

options

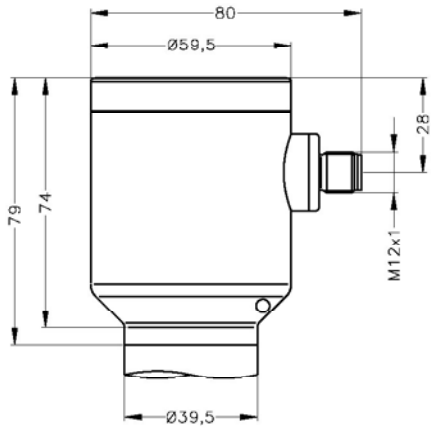

male plug M12x1 4-pin,
with display module

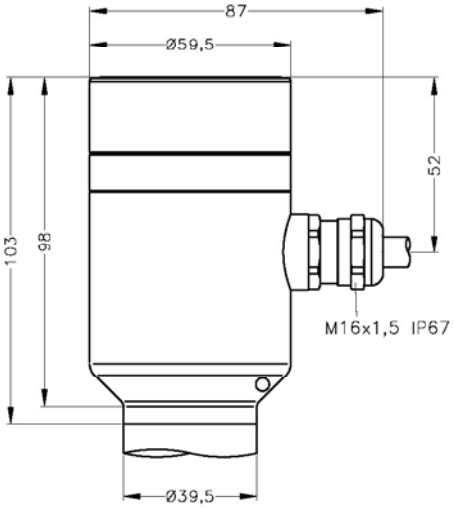

terminal clamps,
with display module

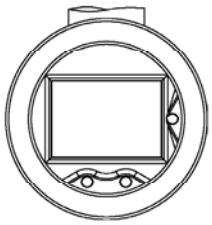

display module
(top view)

[5] for pressure port of PVC the maximum permissible temperature is 50 °C

Aluminium die cast case

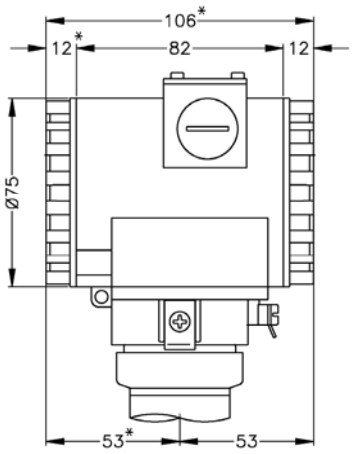

standard

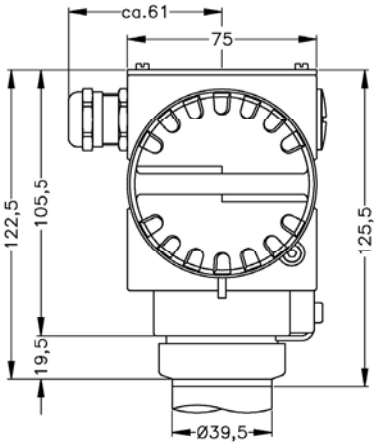

terminal clamp, without display module

option

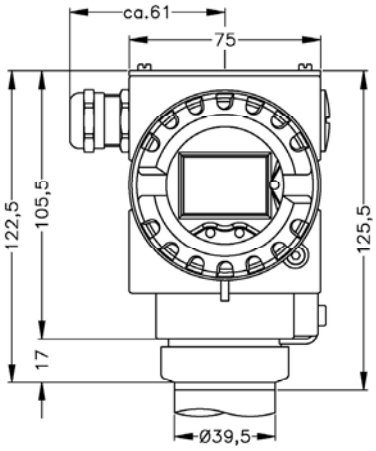

terminal clamp, with display module

⇨ With optional display module the lengths marked with * increase by 19 mm.

Mechanical connections

Inch thread

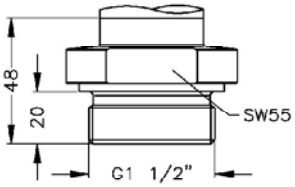

G1 1/2" flush (DIN 3852)

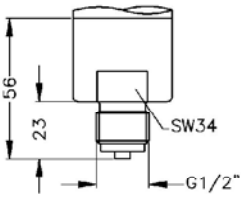

G1/2" EN 837 [6]

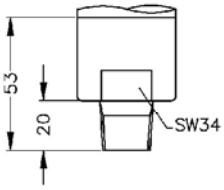

1/2" NPT [6]

Clamp

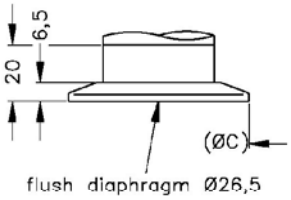

dimensions in mm		
size	1 1/2"	2"
C	50,5	64

Dairy pipe [7]

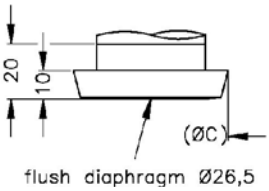

dimensions in mm		
size	DN 40	DN 50
C	56	68,5

Varivent [6]

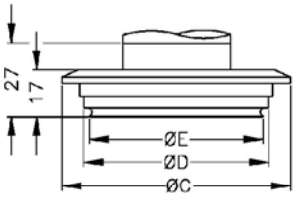

dimensions in mm	
size	DN 40/50
C	84
D	68
E	64

Flange [6, 8]

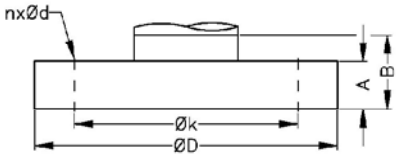

dimensions in mm			
size	DN25/PN40	DN50/PN40	DN80/PN16
D	115	165	200
k	85	125	160
A	18	20	20
B	28	30	30
n	4	4	8
d	14	18	18

[6] on request

[7] cup nut for dairy pipe is included in the delivery (already pre-assembled)

[8] DN80/PN16 possible for nominal pressure ranges up to 16 bar

Electrical connection

Stainless steel field housing	standard: terminal clamps in clamping chamber; cable gland M16x1.5 (IP 67) (Ø-range 5 ... 10 mm); clamp section: 1,5 mm^2 options: M12x1 4-pin; cable outlet [9] (cable with air tube) cable capacitance: signal line/shield: 150 pF/m signal line/signal line: 100 pF/m cable inductance: signal line/shield: 1.0 µH/m signal line/signal line: 1.0 µH/m
Aluminium die cast case	terminal clamps in clamping chamber; cable gland M16x1.5 (IP 67) (Ø-range 5 ... 10 mm); clamp section: 2,5 mm^2

Materials

Pressure port	stainless steel 1.4571 (316 Ti) / PVC [10] / PVDF [10]
Housing	stainless steel 1.4301 (304) / aluminium die cast, powder-coated
Viewing glass	laminated safety glass
Seals (media wetted)	FKM / EPDM others on request
Diaphragm	standard: ceramics Al_2O_3 96 % option: ceramics Al_2O_3 99.9 % (only pressure ranges 0,16 bar, 0,4 bar and 1 bar)
Media wetted parts	pressure port, seals, diaphragm

Miscellaneous

Current consumption	max. 25 mA
Ingress protection	IP 67
Weight	min. 400 g (depending on housing and mechanical connection)
Installation position	any
Operational life	> 100 x 10^6 pressure cycles

Pin configuration

		stainless steel ball housing			aluminium die cast case
Electrical connection		terminal clamp	M12x1 (4-pin)	cable colours (DIN 47100)	terminal clamp
2-wire-system	Supply +	1	1	white	2
	Supply –	2	3	brown	4
	Test [11]	-	-	-	3
	Ground	6	plug housing	cable shield	1

Wiring diagram

2-wire-system (current)

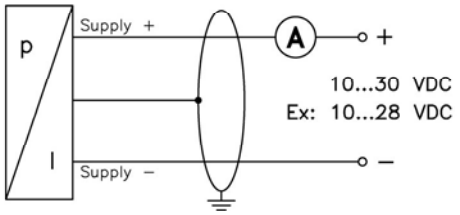

2-wire-system (current) HART®

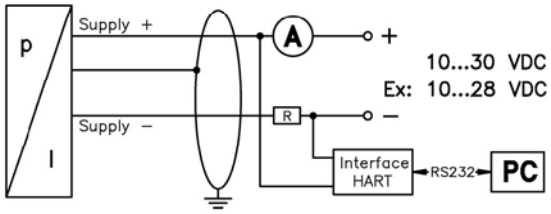

[9] in preparation

[10] only possible with mech. connection G1 1/2" flush (DIN 3852)

[11] by connecting the terminals Supply + and Test, the output signal can be measured **without** disconnecting the power supply

TR Automatyka Sp. z o.o.
ul. Lechicka 14, 02-156 Warszawa
NIP: 522-27-58-993

tel. +48 22 886 10 16, fax +48 22 846 50 37
http:\\ www.trautomatyka.pl
e-mail: biuro@trautomatyka.pl